KYODAI 2024 04-05.05.2024. Rīga U16 Z-38

Competitors A

Competitors: 6

#	Name	Club	1	2	3	Wins	Pts	Pos
1	Sandis NIKOLAJEVS	LAT/Kyodai		10		1	10	2
2	Aleksejs NATAROVS	LAT/Kyodai				0	0	3
3	Abdulaziz ZHORGOTAEV	KGZ/Kyrgyz Republic	10	10		2	20	1

Matches A

Match	White			Blue	Result	Time
1	Sandis NIKOLAJEVS	1	2	Aleksejs NATAROVS	10-00s1	0:53
3	Sandis NIKOLAJEVS	1	3	Abdulaziz ZHORGOTAEV	00-10	0:28
5	Aleksejs NATAROVS	2	3	Abdulaziz ZHORGOTAEV	00-10	0:11

Competitors B

#	Name	Club	4	5	6	Wins	Pts	Pos
4	Sando TANASI	LAT/Jūrmalas SS			10	1	10	2
5	Rokas JASAITIS	LTU/NAGLISGYM	10			1	10	3
6	Ričards ĶĪSIS	LAT/Kyodai		10		1	10	1

Matches B

Match	White			Blue	Result	Time
2	Sando TANASI	4	5	Rokas JASAITIS	00s3-10	10:37
4	Sando TANASI	4	6	Ričards ĶĪSIS	10s1-00	6:38
6	Rokas JASAITIS	5	6	Ričards ĶĪSIS	00s2-10	4:00

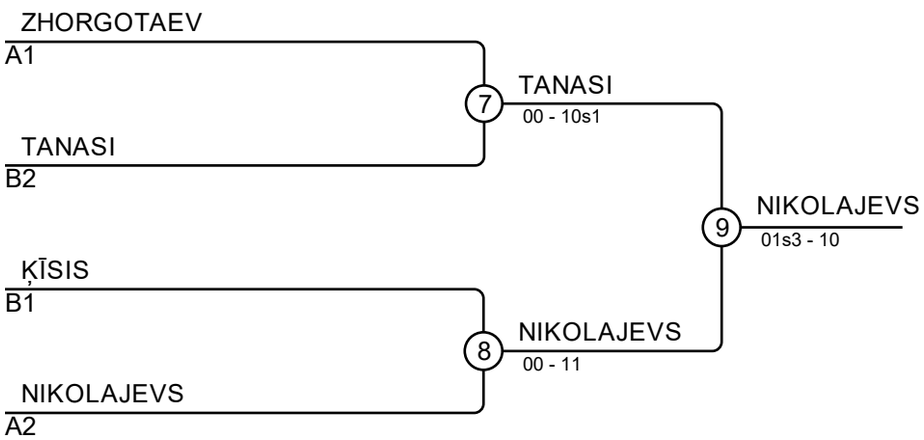

Results

Pos	Name
1	Sandis NIKOLAJEVS, LAT/Kyodai
2	Sando TANASI, LAT/Jūrmalas SS
3	Abdulaziz ZHORGOTAEV, KGZ/Kyrgyz Republic
3	Ričards ĶĪSIS, LAT/Kyodai