KYODAI 2024 04-05.05.2024. Rīga U14 Z-66

Competitors: 12

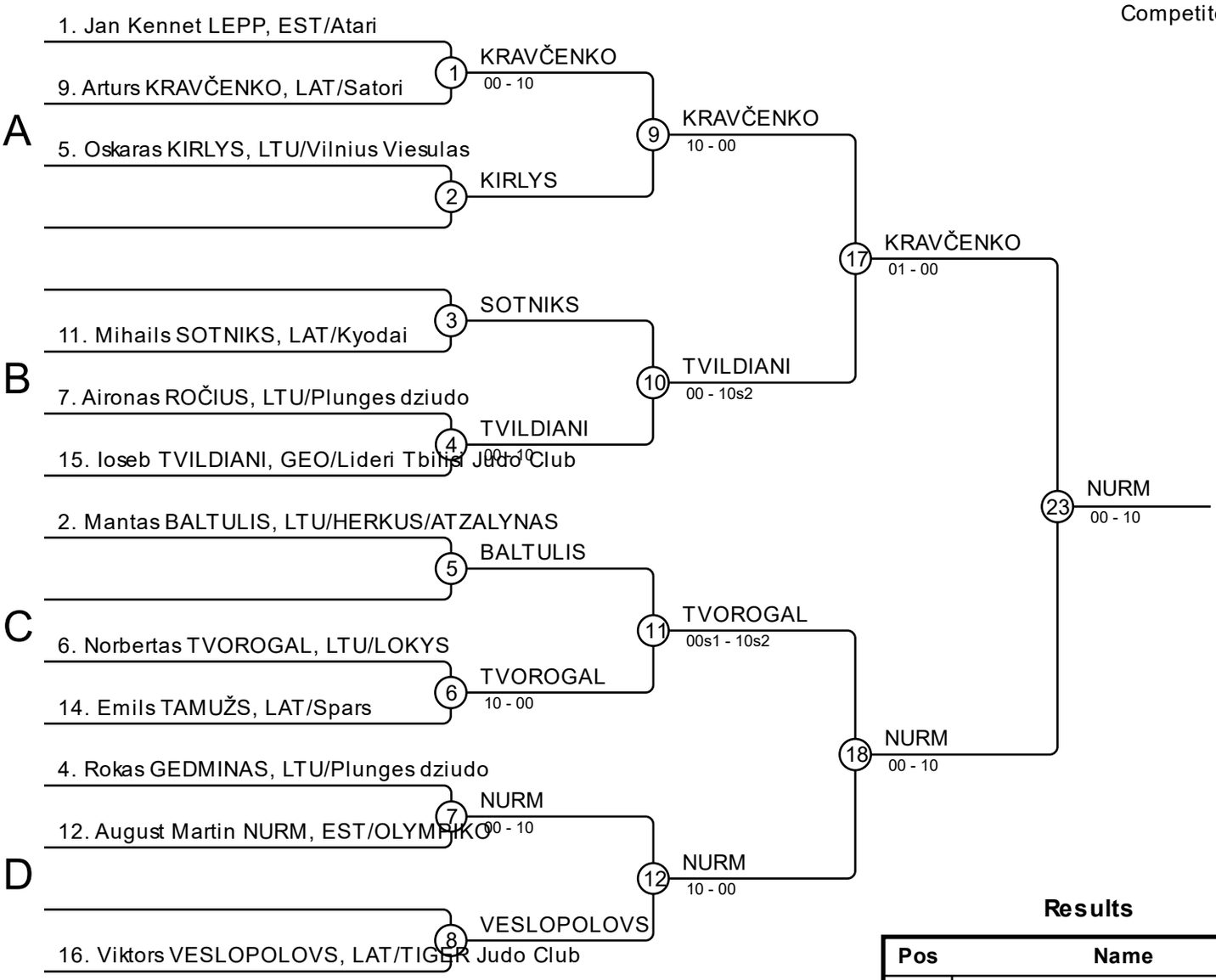

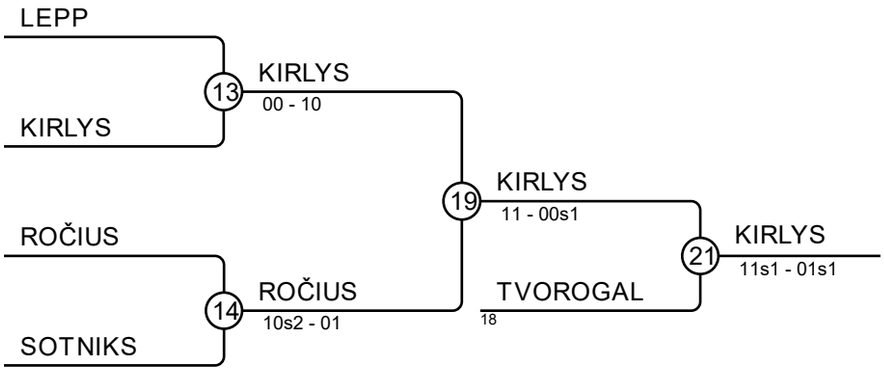

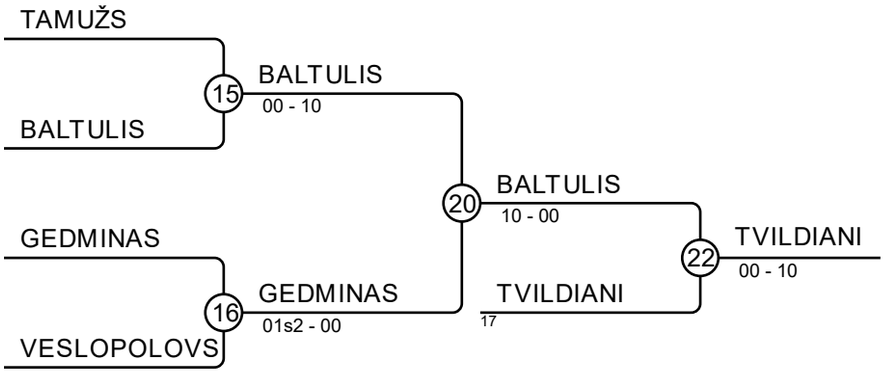

Results

Pos	Name
1	August Martin NURM, EST/OLYMPIKO
2	Arturs KRAVČENKO, LAT/Satori
3	Oskaras KIRLYS, LTU/Vilnius Viesulas
3	Ioseb TVILDIANI, GEO/Lideri Tbilisi J
5	Norbertas TVOROGAL, LTU/LOKYS
5	Mantas BALTULIS, LTU/HERKUS/ATZ
7	Aironas ROČIUS, LTU/Plunges dziudo
7	Rokas GEDMINAS, LTU/Plunges dziud