YOUNG STARS 2018 31 MAR Jūrmala B U16 z -50 kg

Competitors: 14

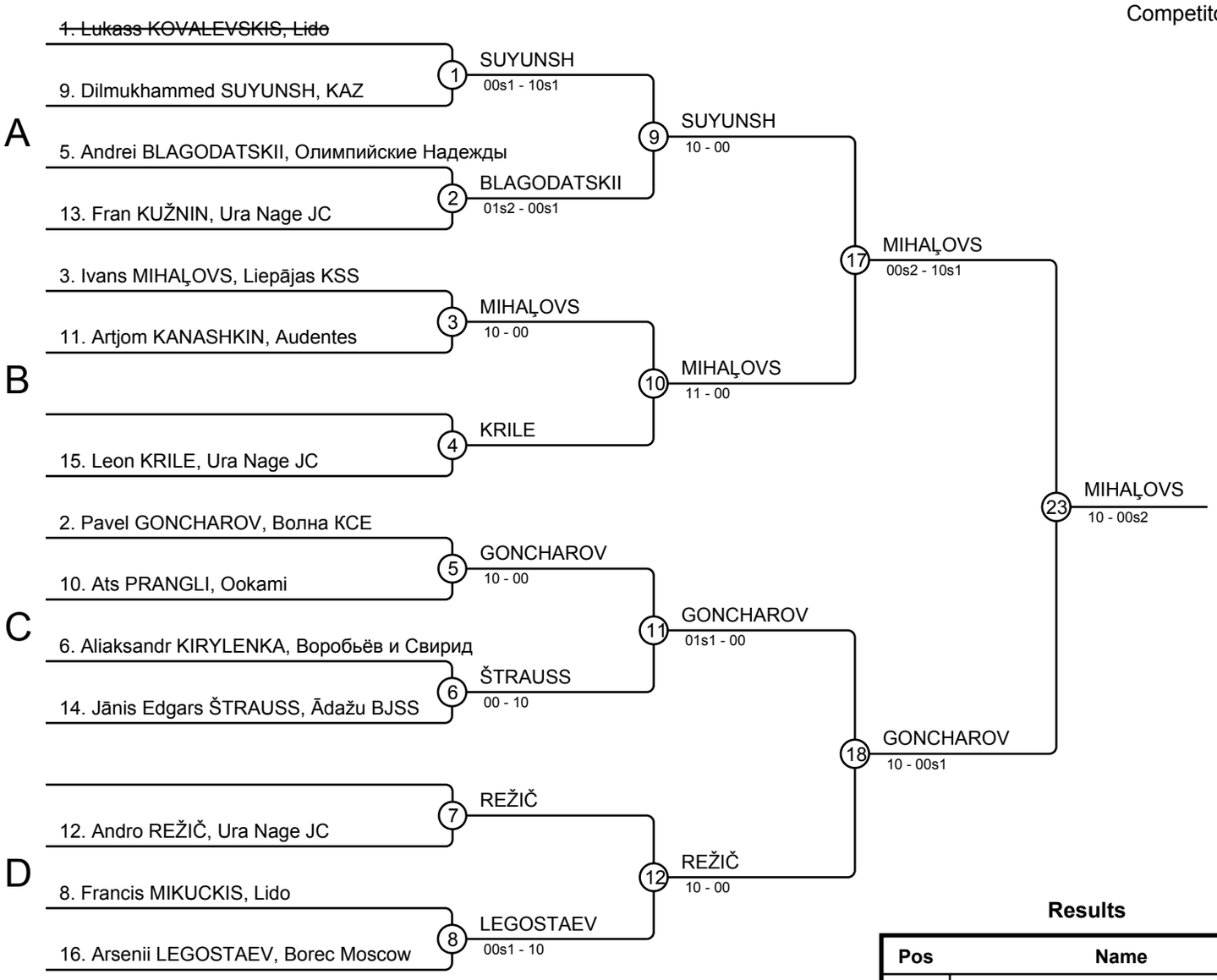

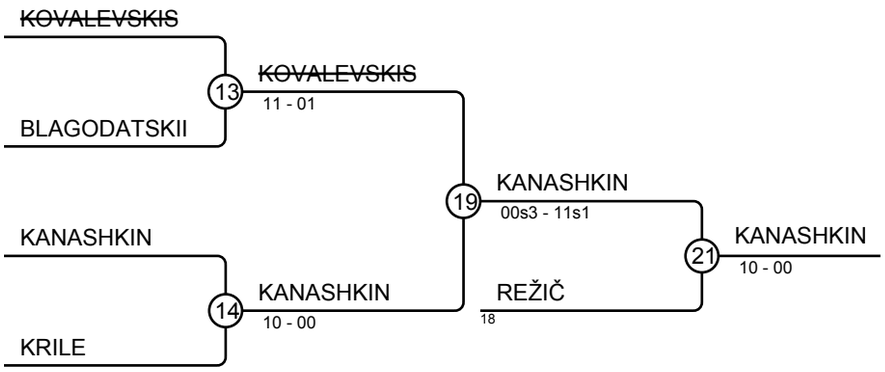

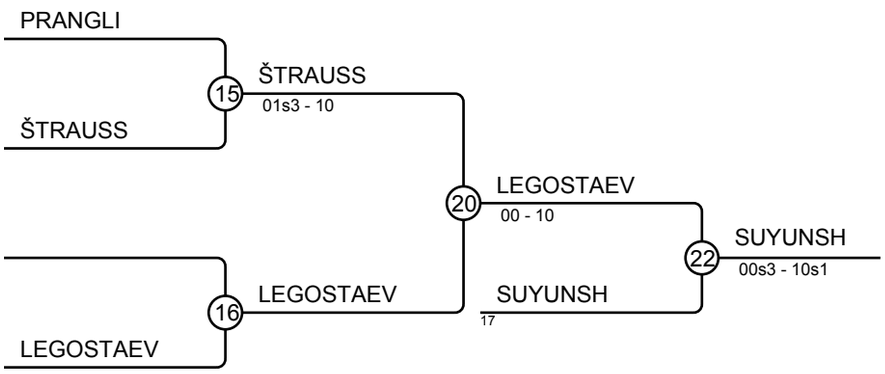

Results

Pos	Name
1	Ivans MIHAĻOVS, Liepājas KSS
2	Pavel GONCHAROV, Волна КСЕ
3	Artjom KANASHKIN, Audentes
3	Dilmukhammed SUYUNSH, KAZ
5	Andro REŽIČ, Ura Nage JC
5	Arsenii LEGOSTAEV, Borec Moscow
7	~~Lukass KOVALEVSKIS, Lido~~
7	Jānis Edgars ŠTRAUSS, Ādažu BJSS