KYODAI 2017 6-MAI Rīga U14 m -36 kg

Competitors: 13

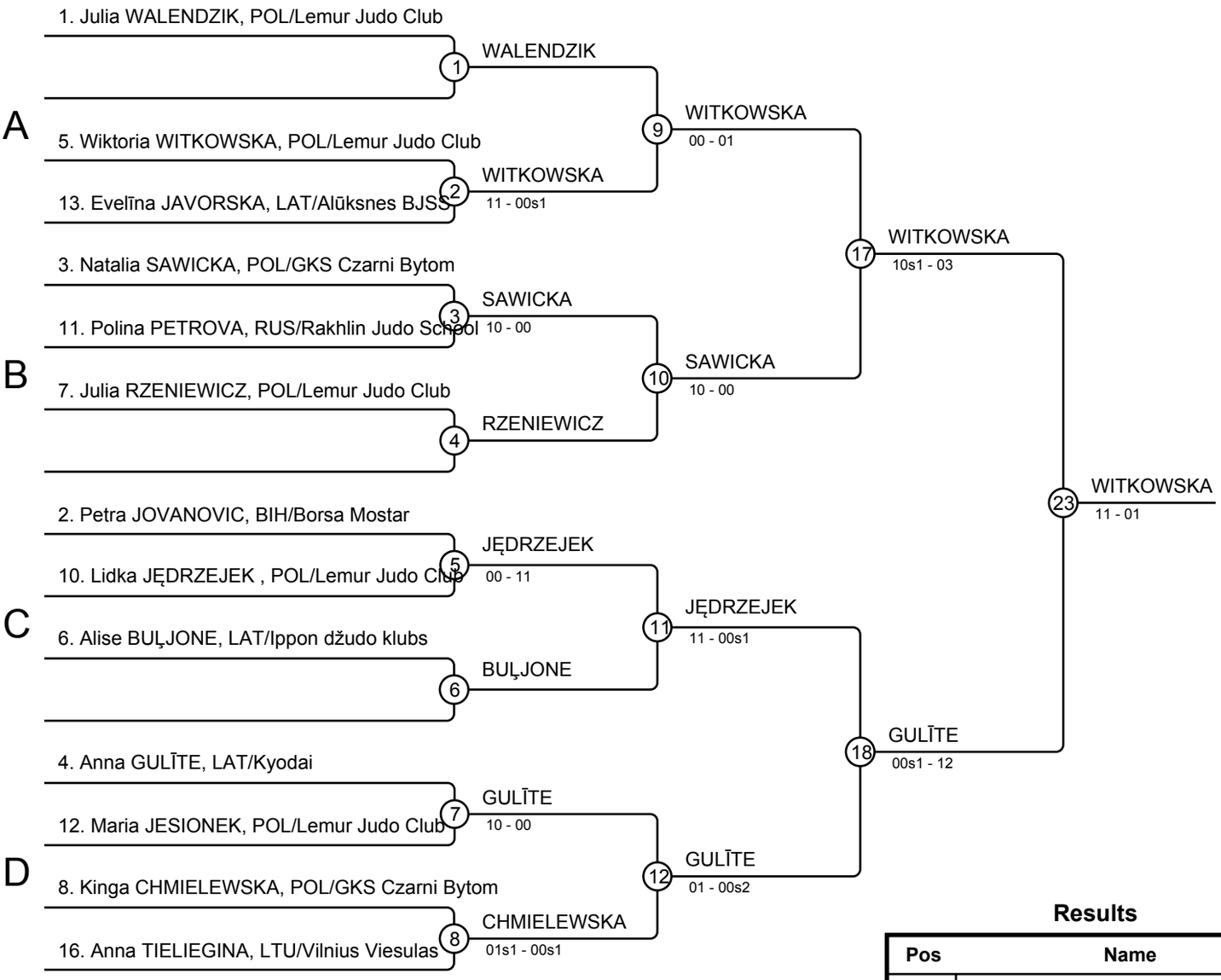

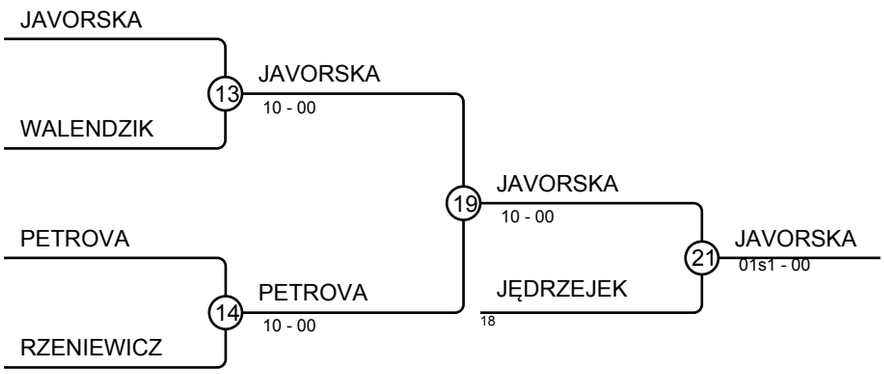

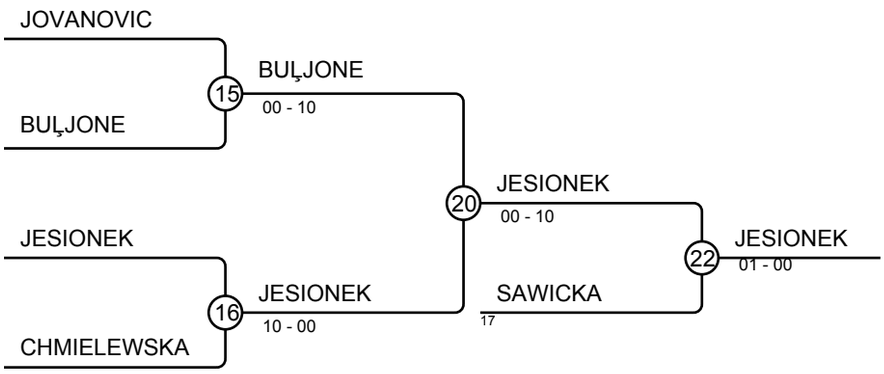

Results

Pos	Name
1	Wiktoria WITKOWSKA, POL/Lemur Judo Club
2	Anna GULĪTE, LAT/Kyodai
3	Evelīna JAVORSKA, LAT/Alūksnes BJSS
3	Maria JESIONEK, POL/Lemur Judo Club
5	Lidka JĘDRZEJEK , POL/Lemur Judo Club
5	Natalia SAWICKA, POL/GKS Czarni Bytom
7	Polina PETROVA, RUS/Rakhlin Judo School
7	Alise BUĻJONE, LAT/Ippon džudo klubs