ALŪKSNE 2015 19/20-DEC B U16 -55 kg

Competitors: 6

Competitors A

#	Name	Club	1	2	3	Wins	Pts	Pos
1	Merko ASALEHTS	EST/Kempo				0	0	3
2	Sergejs HROMENKOVS	LAT/Liepājas KSS	10			1	10	2
3	Markus SAVI	EST/Aitado	10	1		2	11	1

Matches A

Match	White			Blue	Result	Time
1	Merko ASALEHTS	1	2	Sergejs HROMENKOVS	0 - 10	0:53
3	Merko ASALEHTS	1	3	Markus SAVI	0 - 10	1:44
5	Sergejs HROMENKOVS	2	3	Markus SAVI	0 - 1	3:00

Competitors B

#	Name	Club	4	5	6	Wins	Pts	Pos
4	Vladimirs ROMAŠKINS	LAT/V.Zeļonija SS		10	10	2	20	1
5	Erik PÄSLANE	EST/Afina			7	1	7	2
6	Raimonds TAUBE	LAT/Ādažu BJSS				0	0	3

Matches B

Match	White			Blue	Result	Time
2	Vladimirs ROMAŠKINS	4	5	Erik PÄSLANE	10 - 0	2:00
4	Vladimirs ROMAŠKINS	4	6	Raimonds TAUBE	10 - 0	1:34
6	Erik PÄSLANE	5	6	Raimonds TAUBE	7 - 0	3:00

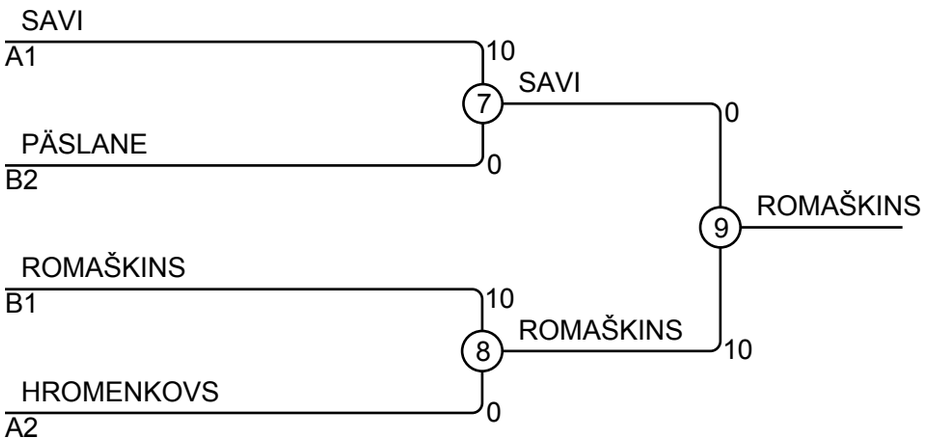

Results

Pos	Name
1	Vladimirs ROMAŠKINS, LAT/V.Zeļonija SS
2	Markus SAVI, EST/Aitado
3	Erik PÄSLANE, EST/Afina
3	Sergejs HROMENKOVS, LAT/Liepājas KSS