ALŪKSNE 20/21-DEC-2014 E U10 -23 kg

Competitors: 8

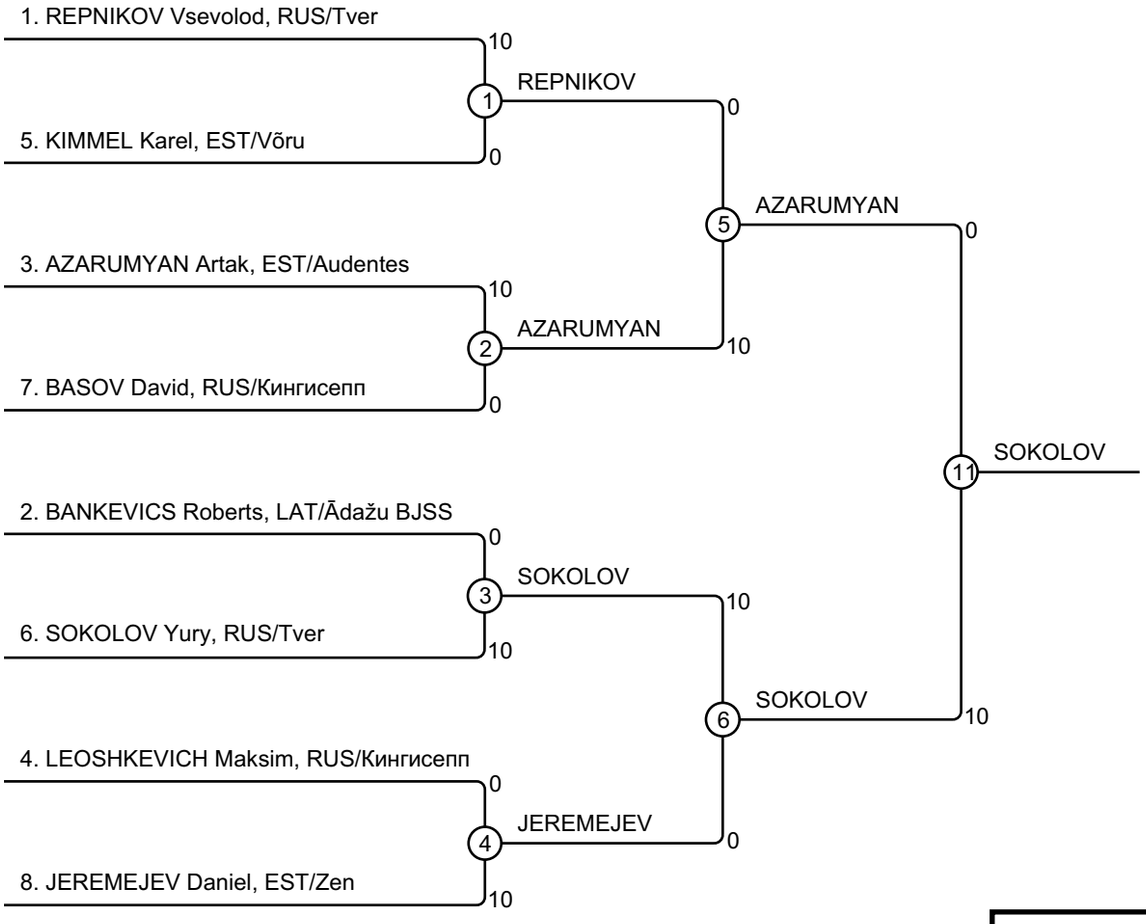

Results
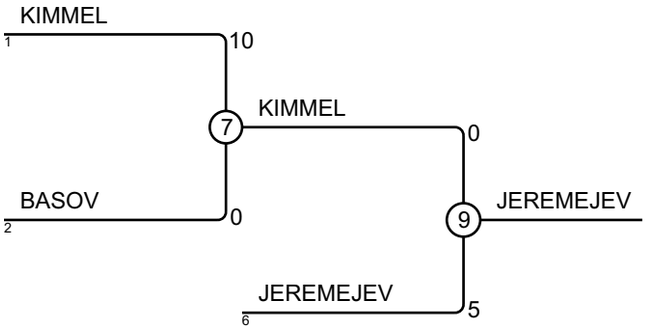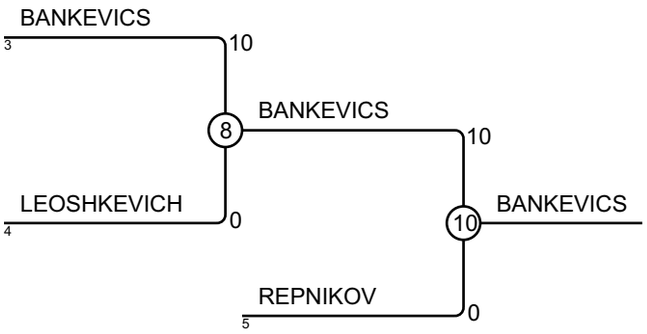
Pos	Name
1	SOKOLOV Yury, RUS/Tver
2	AZARUMYAN Artak, EST/Audentes
3	JEREMEJEV Daniel, EST/Zen
3	BANKEVICS Roberts, LAT/Ādažu BJSS
5	KIMMEL Karel, EST/Võru
5	REPNIKOV Vsevolod, RUS/Tver
7	BASOV David, RUS/Кингисепп
7	LEOSHKEVICH Maksim, RUS/Кингисепп