ALŪKSNE 20/21-DEC-2014 C U14 -60 kg

Competitors: 14

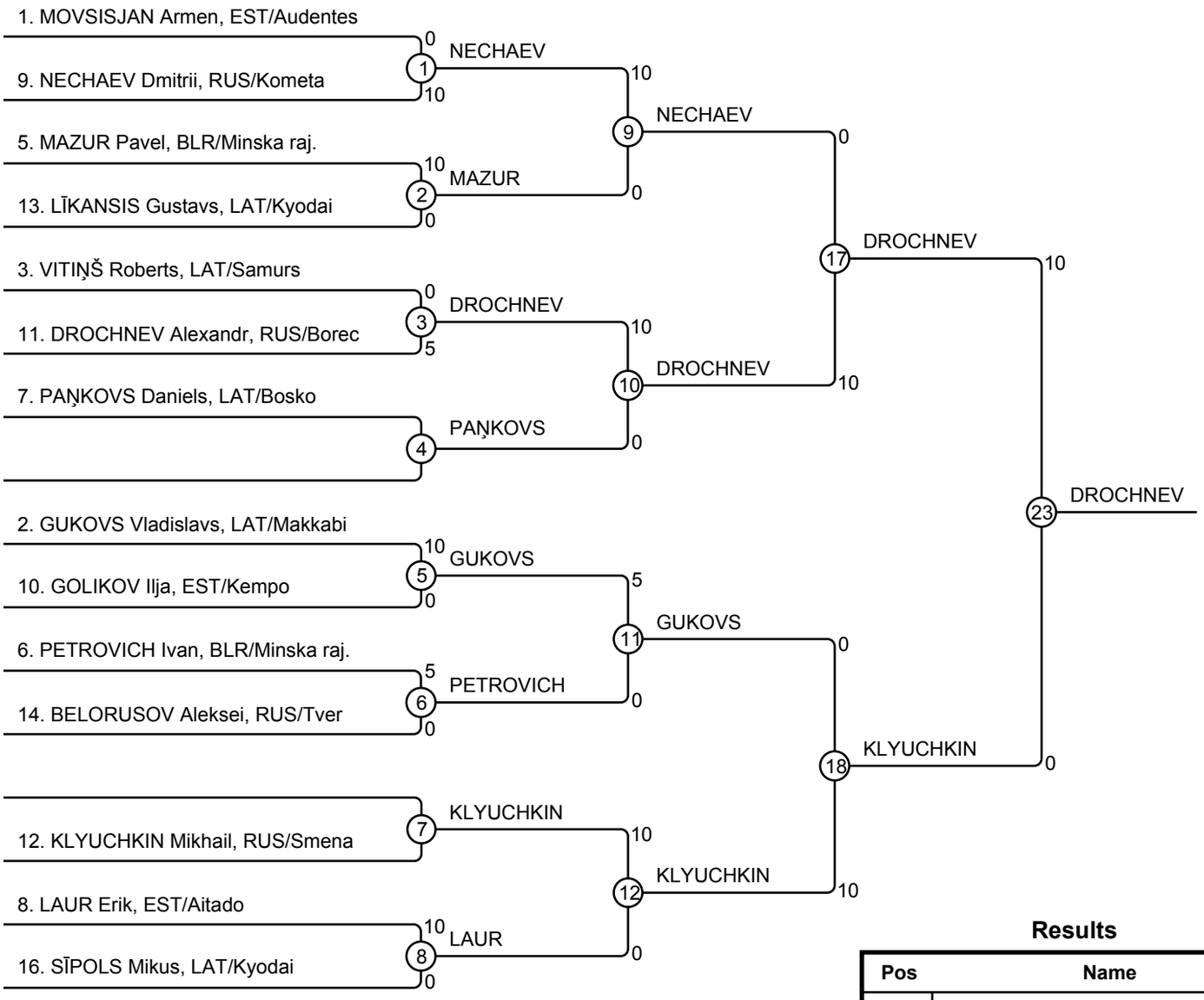

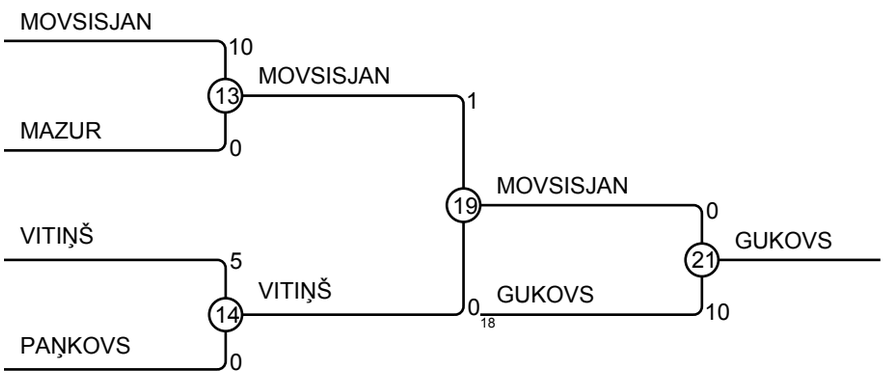

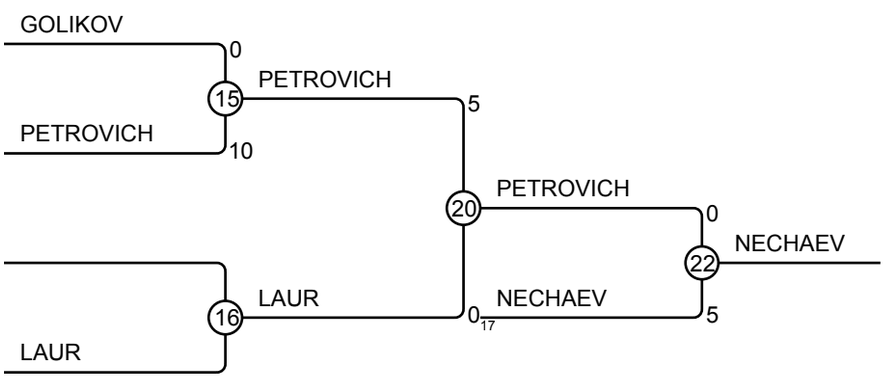

Results

Pos	Name
1	DROCHNEV Alexandr, RUS/Borec
2	KLYUCHKIN Mikhail, RUS/Smena
3	GUKOVS Vladislavs, LAT/Makkabi
3	NECHAEV Dmitrii, RUS/Kometa
5	MOVSISJAN Armen, EST/Audentes
5	PETROVICH Ivan, BLR/Minska raj.
7	VITIŅŠ Roberts, LAT/Samurs
7	LAUR Erik, EST/Aitado